DOLLE®

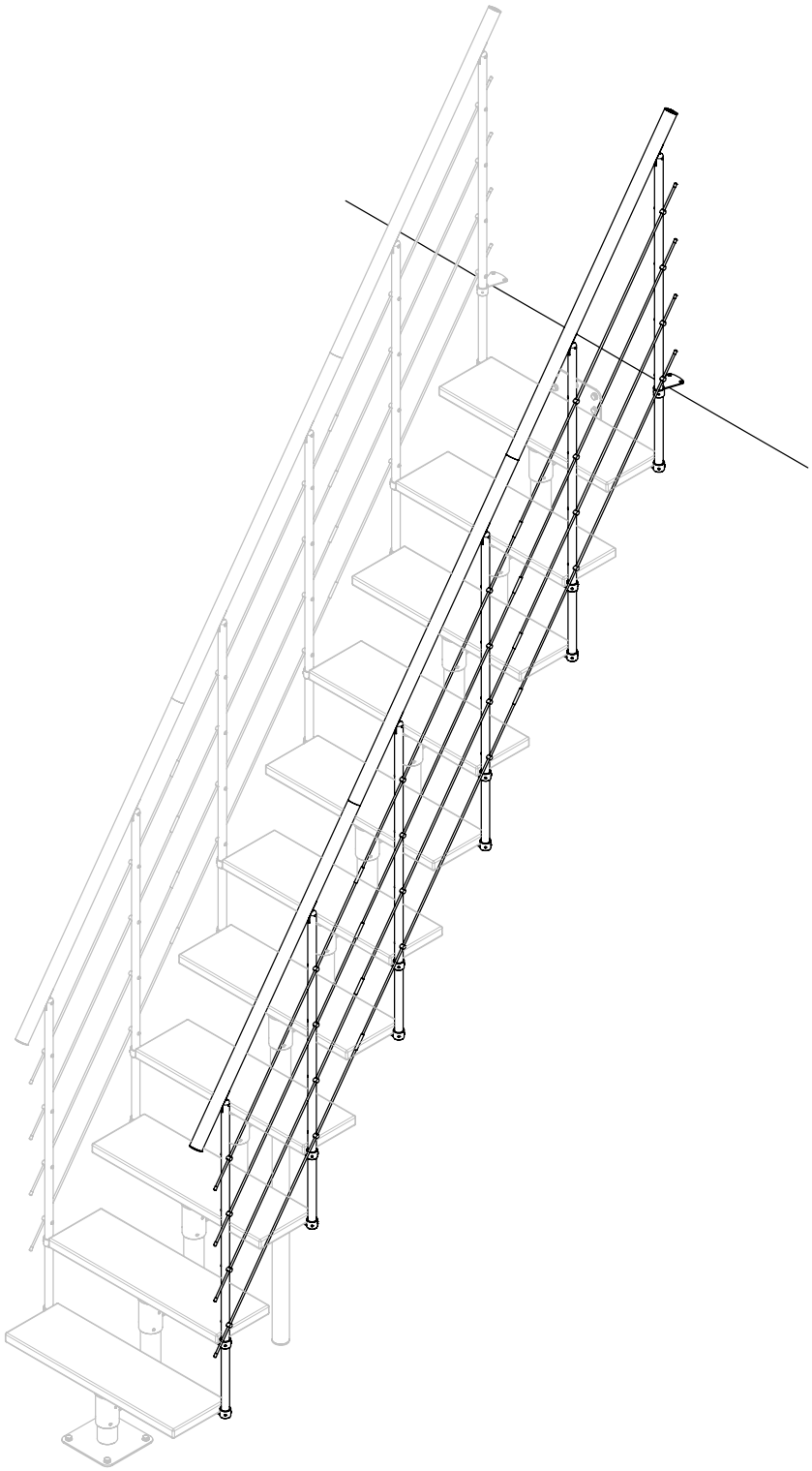

SIDE 2 BANISTER

BOSTON

INSTRUCTION / MONTAGEANLEITUNG
INSTRUKTION / INSTRUCCIÒN / INSTRUKCJA

SOGEM®
PART OF DOLLE GROUP

© DOLLE A/S | In the interest of technical progress we reserve the right to make changes | R1-96811 | 08/10/21

6

	11	12	13
I	11	13	13

K2-1077025 *RAL 7016*
K2-1077026 *RAL 9005*
K2-1077027 *Pearl grey*
K2-1077028 *RAL 9016*

26

	11	12	13
I	6	7	7

K2-1077125 *RAL 7016*
K2-1077126 *RAL 9005*
K2-1077127 *Pearl grey*
K2-1077128 *RAL 9016*

27

x 2
K1-1077150 *RAL 7016*
K1-1077151 *RAL 9005*
K1-1077152 *Pearl grey*
K1-1077153 *RAL 9016*

8

x 1
K2-1077030 *RAL 7016*
K2-1077031 *RAL 9005*
K2-1077032 *Pearl grey*
K2-1077033 *RAL 9016*

9

1133

∅25

	11	12	13
I	6	7	7

K1-1077130 *RAL 7016*
K1-1077131 *RAL 9005*
K1-1077132 *Pearl grey*
K1-1077133 *RAL 9016*

28

x 2
K3-08041

29

	11	12	13
I	24	28	28

K1-04041

30

x 8
K1-40296 *Black / Schwarz / Noir / Sort*
K1-40396 *White / Weiss / Blanc / Hvid*

31

x 8
K1-14939

32

∅40

1125

x 3
K1-40200 *Beech / Buche / Hêtre / Bøg*
\- *Oak / Eiche / Chène / Eg*

33

∅6

1125

K1-14076

	11	12	13
I	12	16	16

40

x 2
K3-08002
Ø8 x 40

44

	11	12	13
I	22	26	26

K3-06130
Ø6 x 30 TX30

45

	11	12	13
I	22	26	26

K3-05056
M6 x 5

46

	11	12	13
I	6	7	7

K3-05011
M5 x 20

48

x 2
K3-06027
Ø5 x 50 TX25

49

Strong glue
Superkleber
Seconde lijm
Colle forte
Superlim

x 1
K3-90001

50

x 1
K1-23345

51

	11	12	13
I	14	16	16

K3-06022 *FZB/BZP*
K3-10226 *RAL 7016*
K3-10405 *RAL 9005*
Ø5 x 35 TX25

52

	11	12	13
I	6	7	7

K3-02101
M5 x 25

53

	11	12	13
I	24	28	28

K1-04040
M6 x16

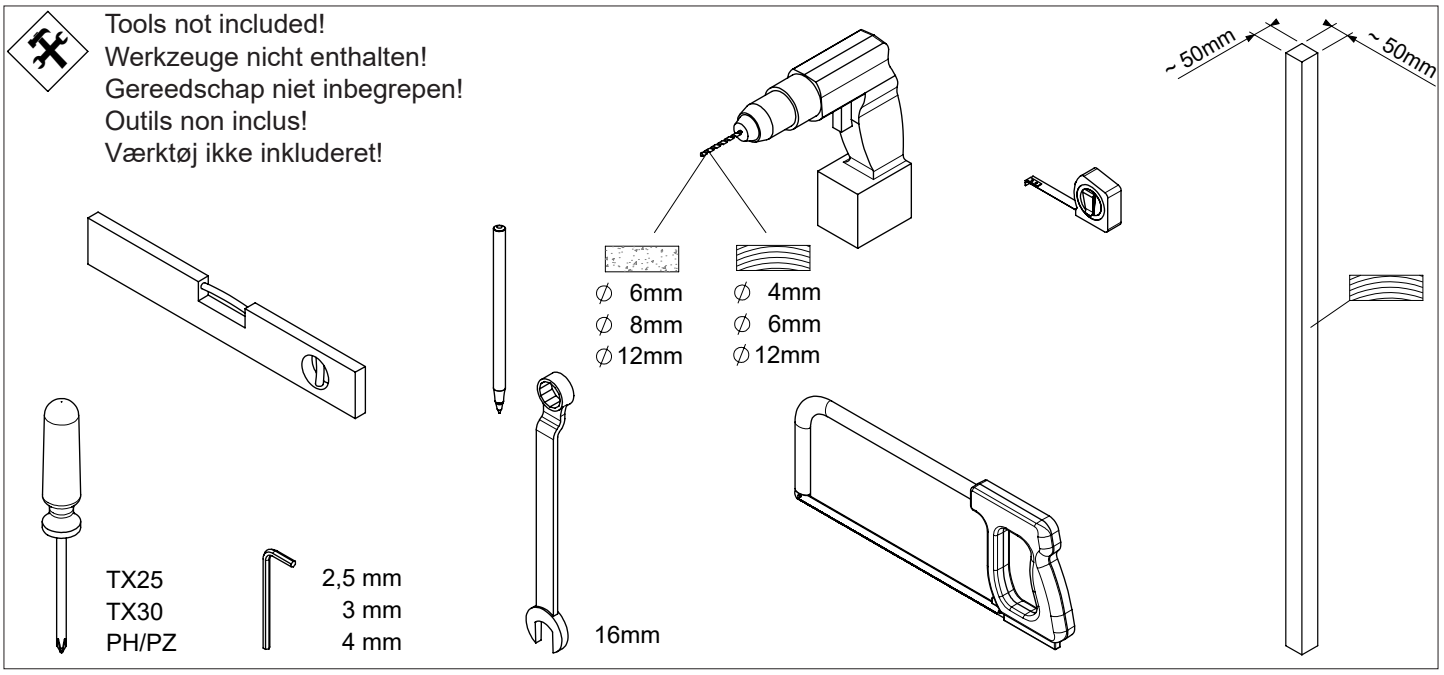
Tools not included!
Werkzeuge nicht enthalten!
Gereedschap niet inbegrepen!
Outils non inclus!
Værktøj ikke inkluderet!
~ 50mm
~ 50mm
∅ 6mm
∅ 8mm
∅ 12mm
∅ 4mm
∅ 6mm
∅ 12mm
TX25
TX30
PH/PZ
2,5 mm
3 mm
4 mm
16mm

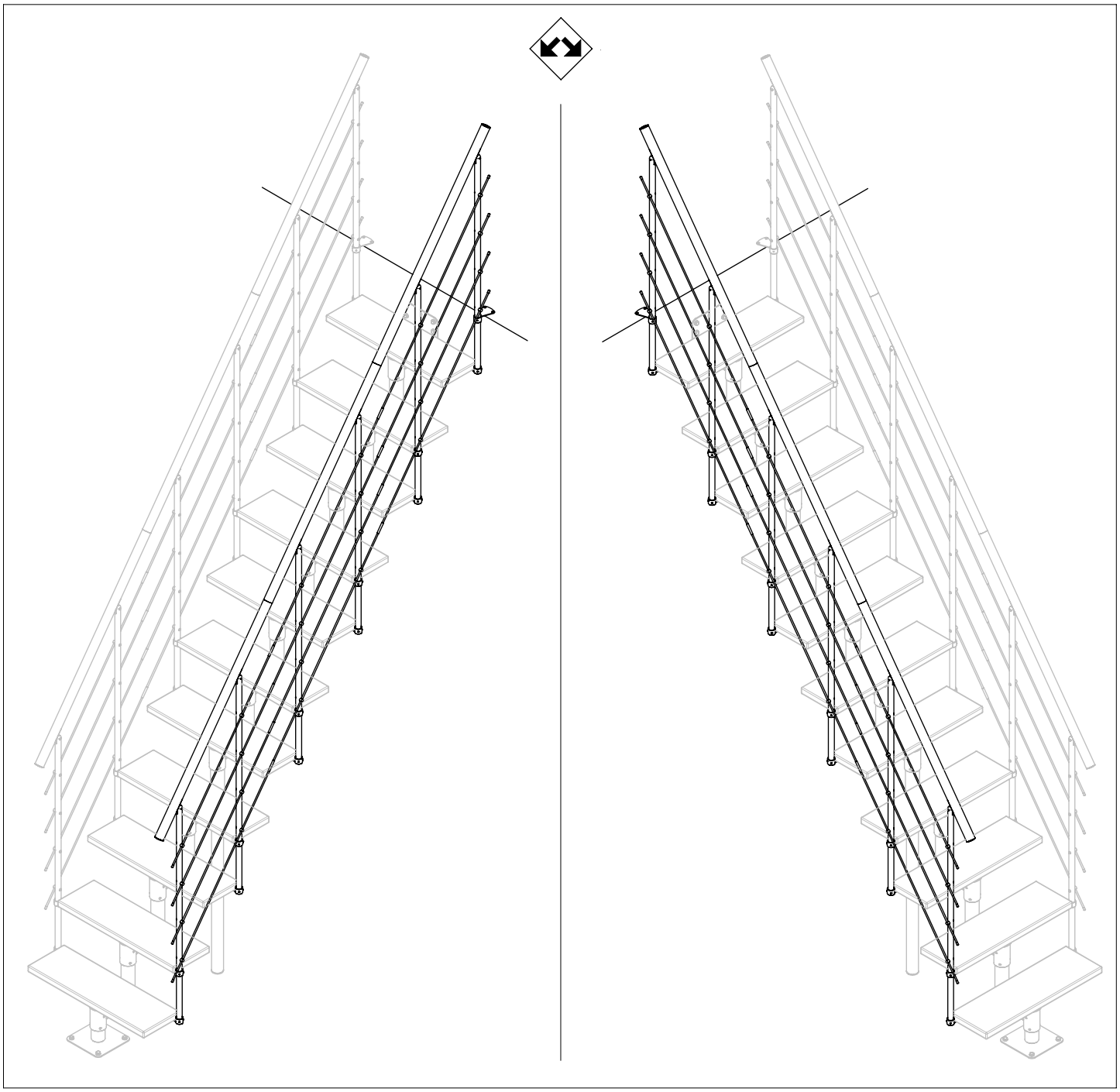

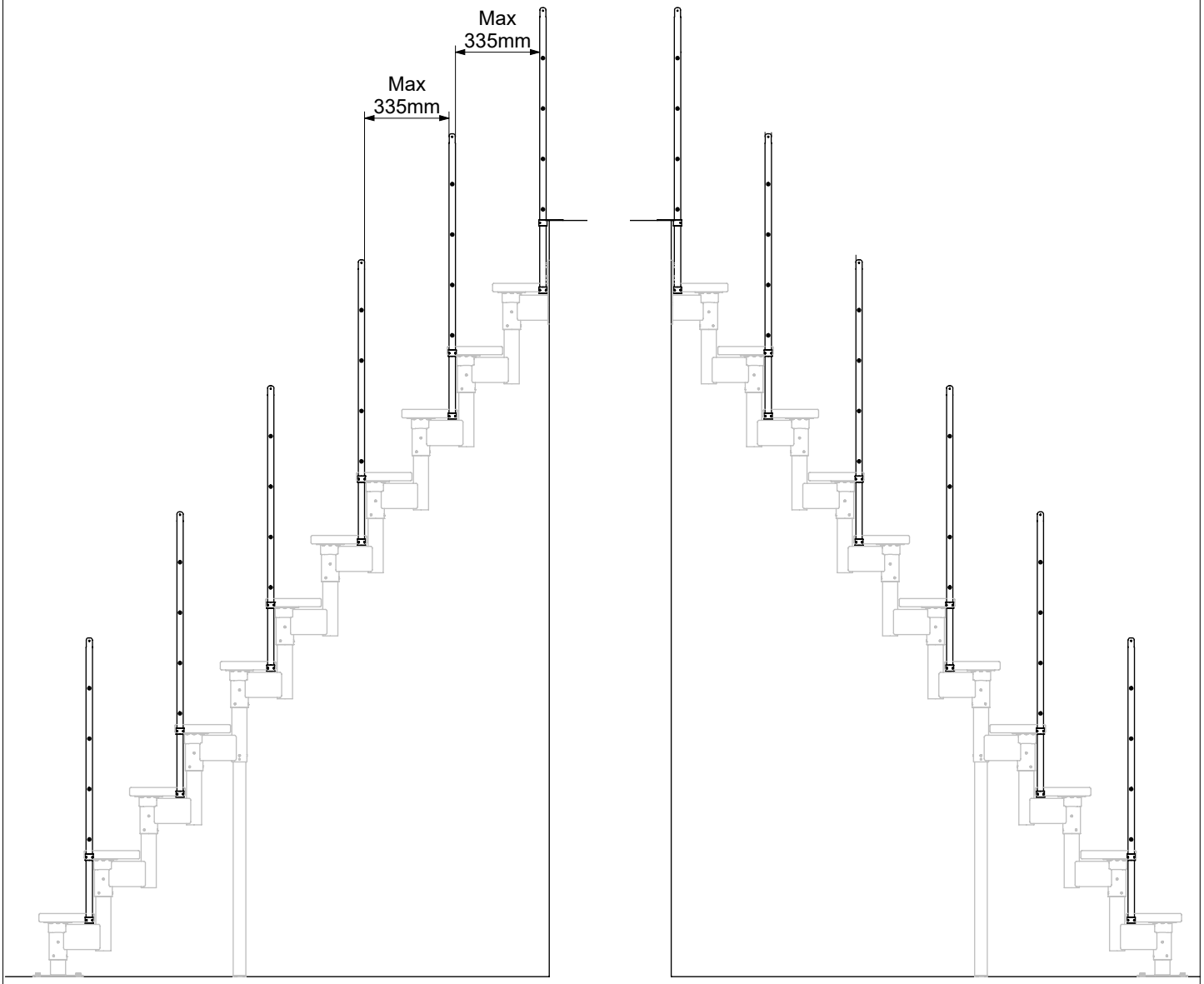
Max
335mm
Max
335mm

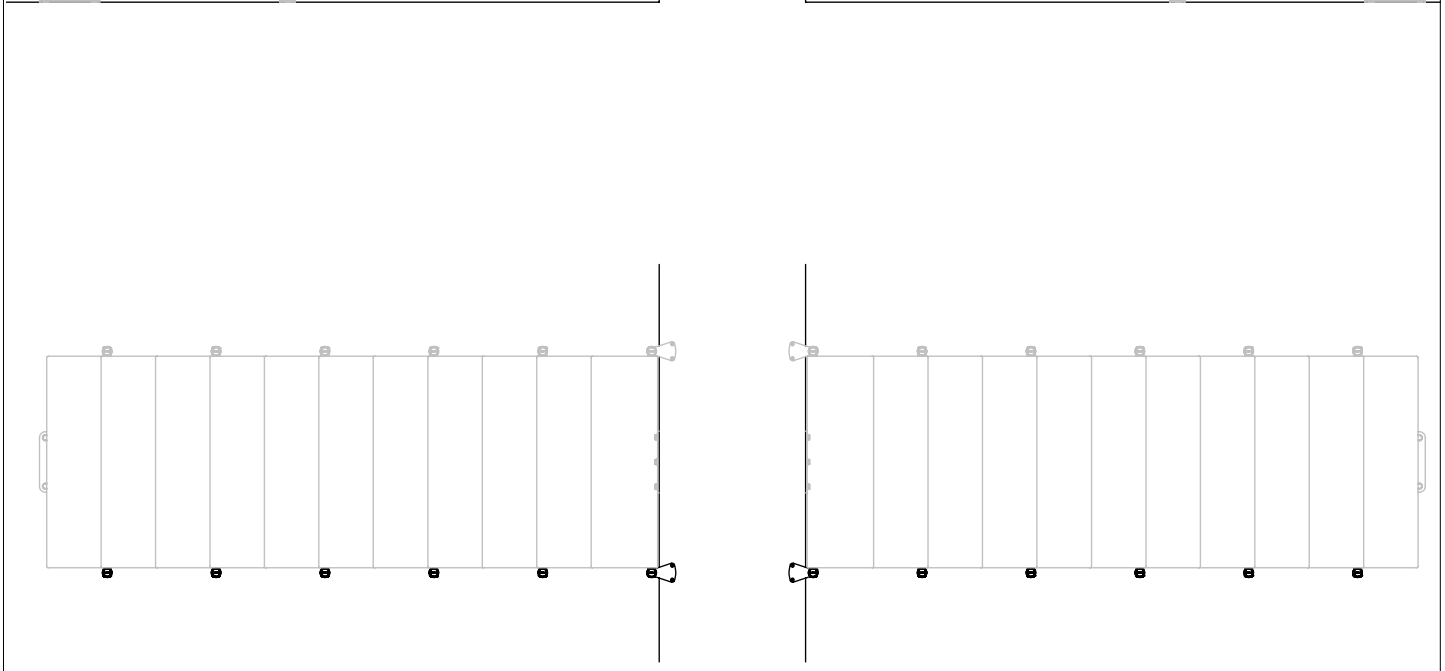

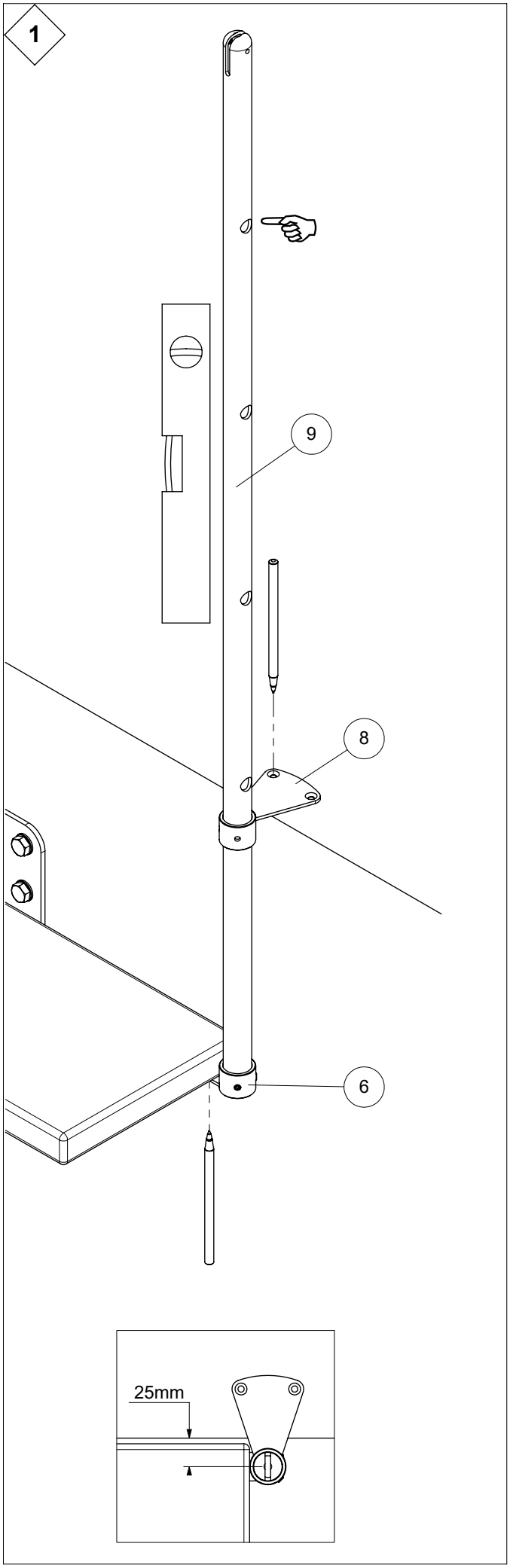
1
9
8
6
25mm

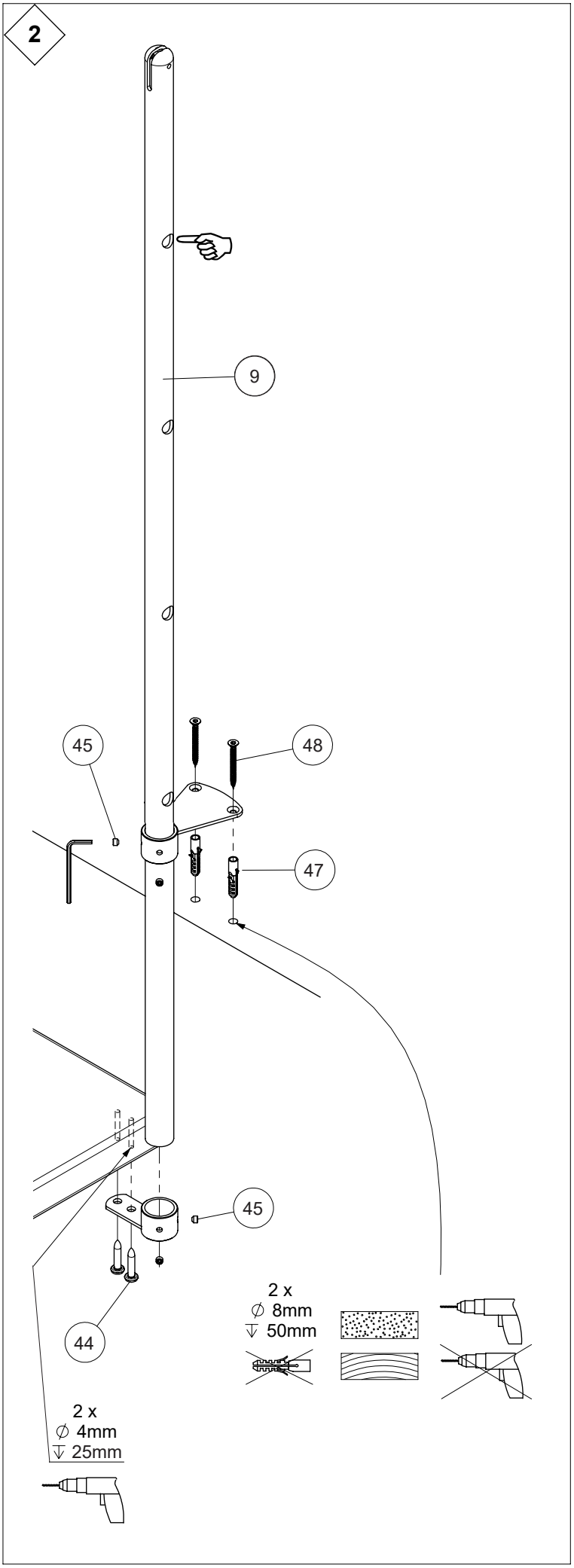
2
9
45
48
47
45
44
2 x
∅ 8mm
⇓ 50mm
2 x
∅ 4mm
⇓ 25mm

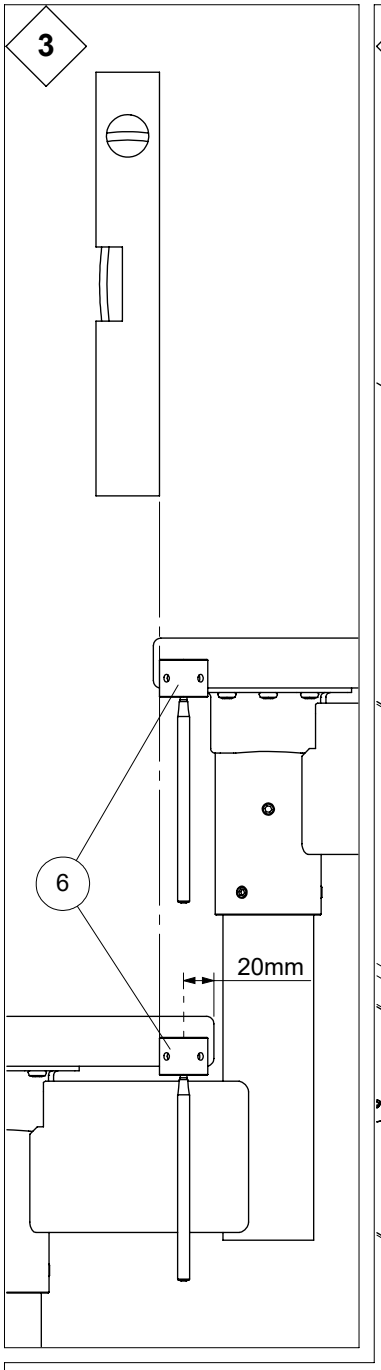
3
6
20mm

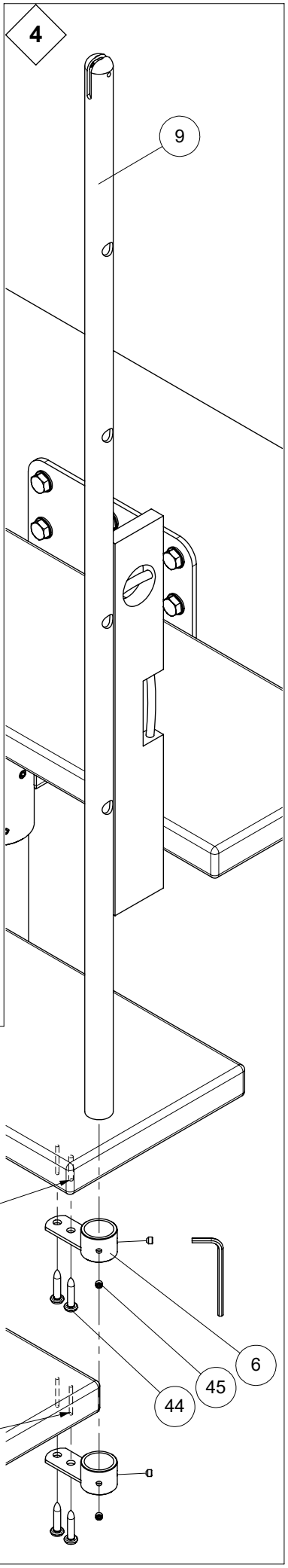
4
9
2 x ∅ 4mm ↧ 25mm
6
45
44
2 x ∅ 4mm ↧ 25mm

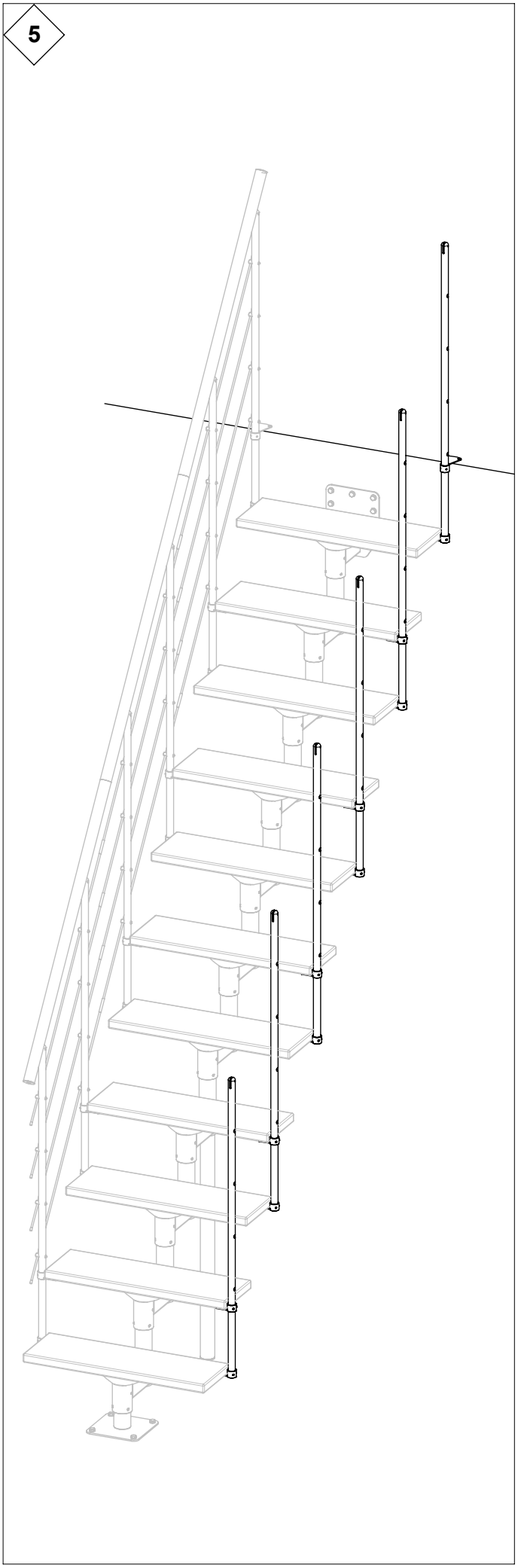
5

7

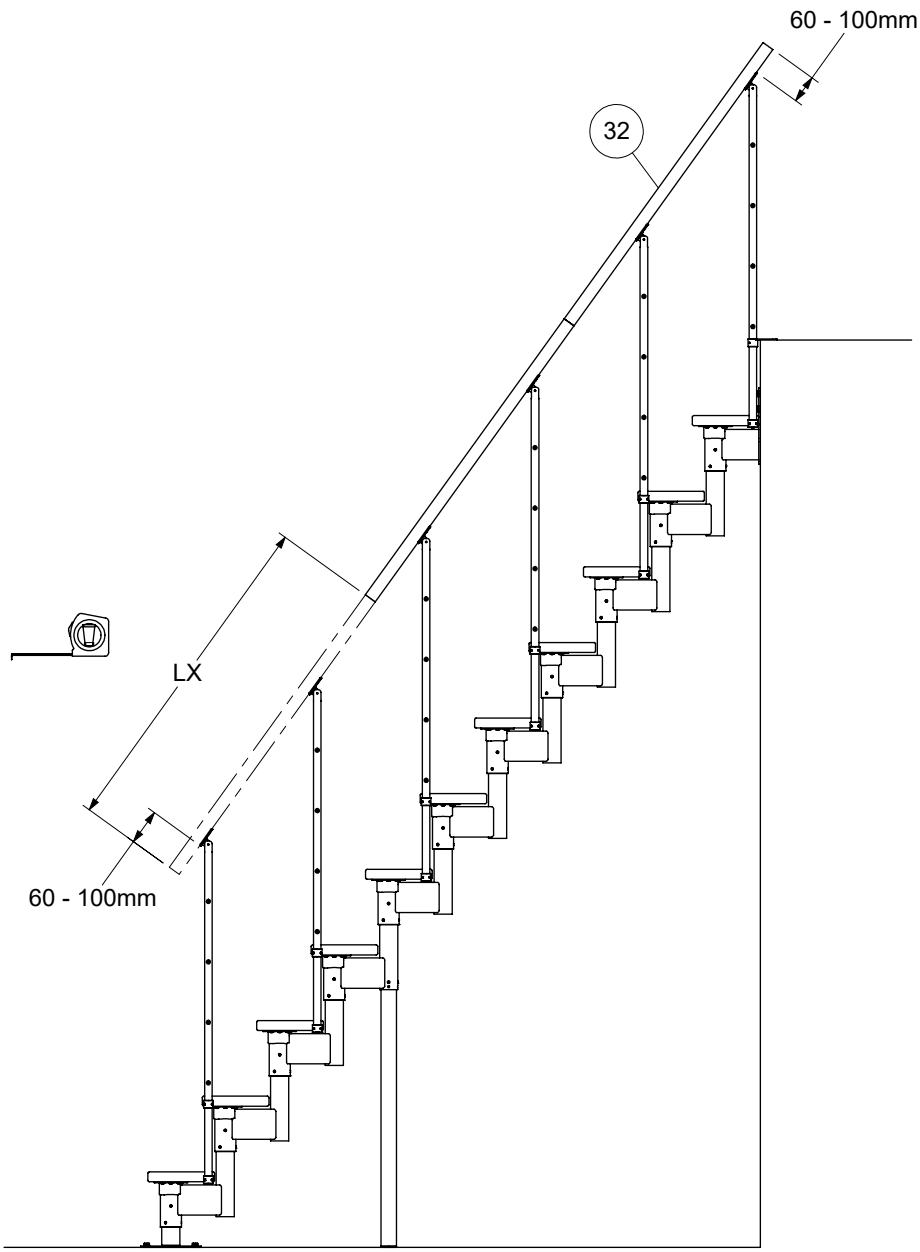

8

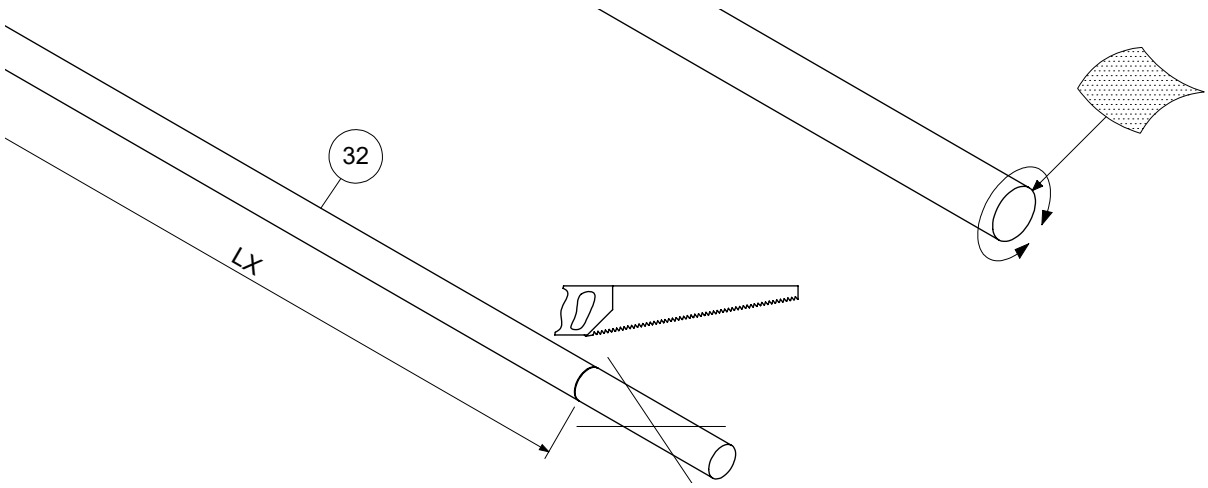

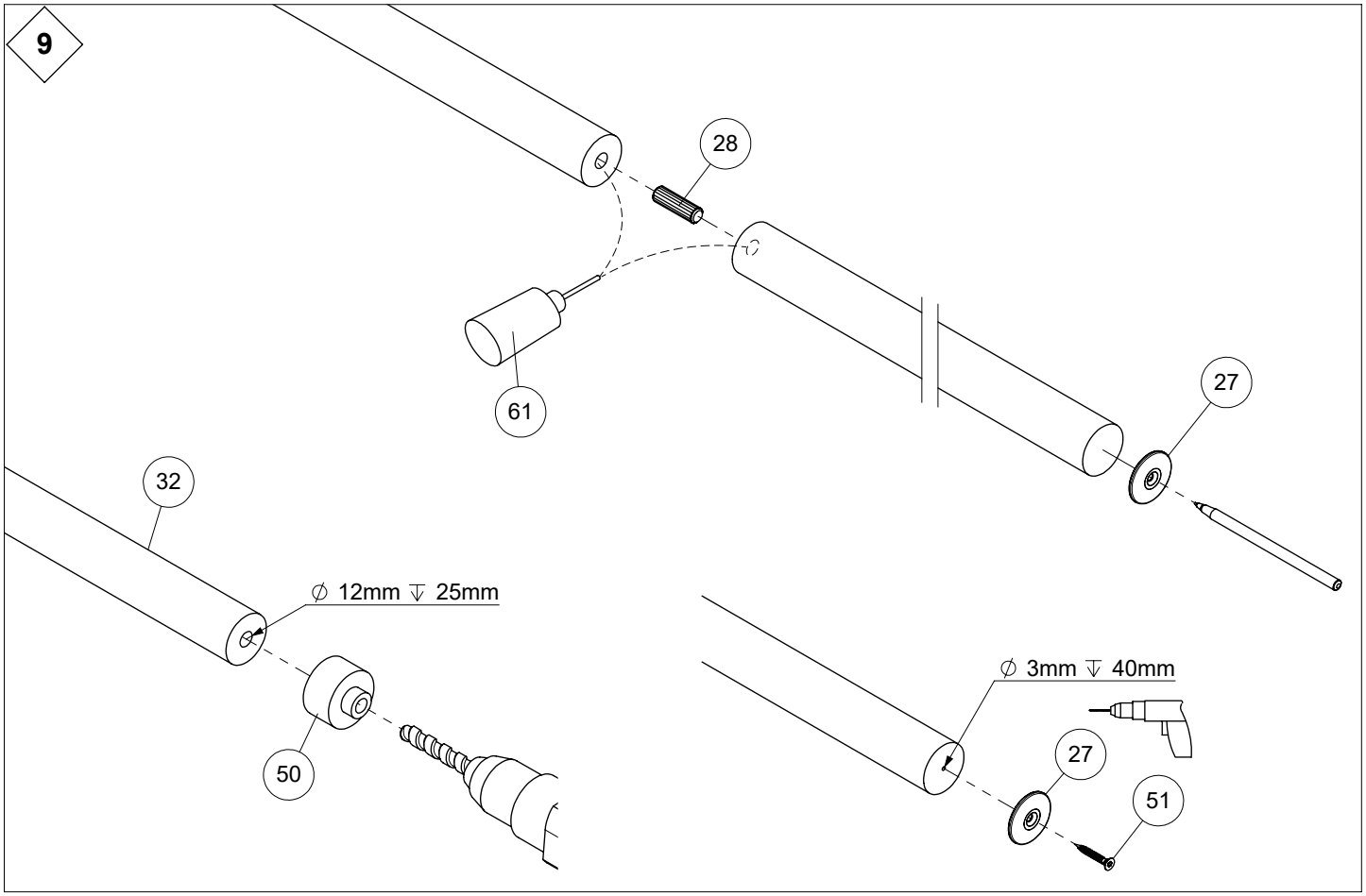
9
28
61
27
32
∅ 12mm ↧ 25mm
50
∅ 3mm ↧ 40mm
27
51

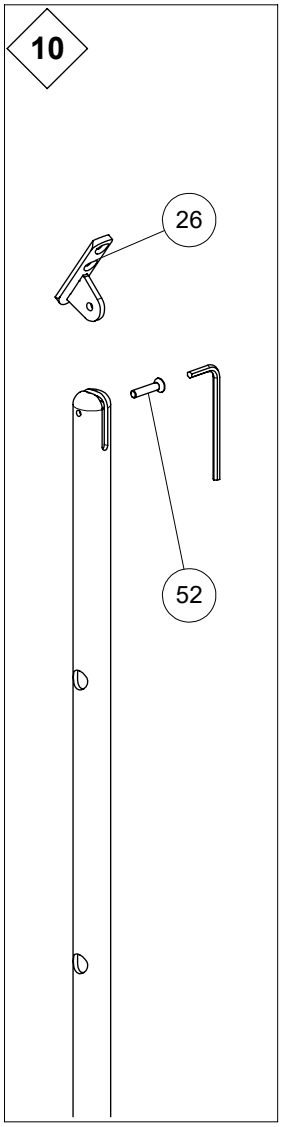
10
26
52

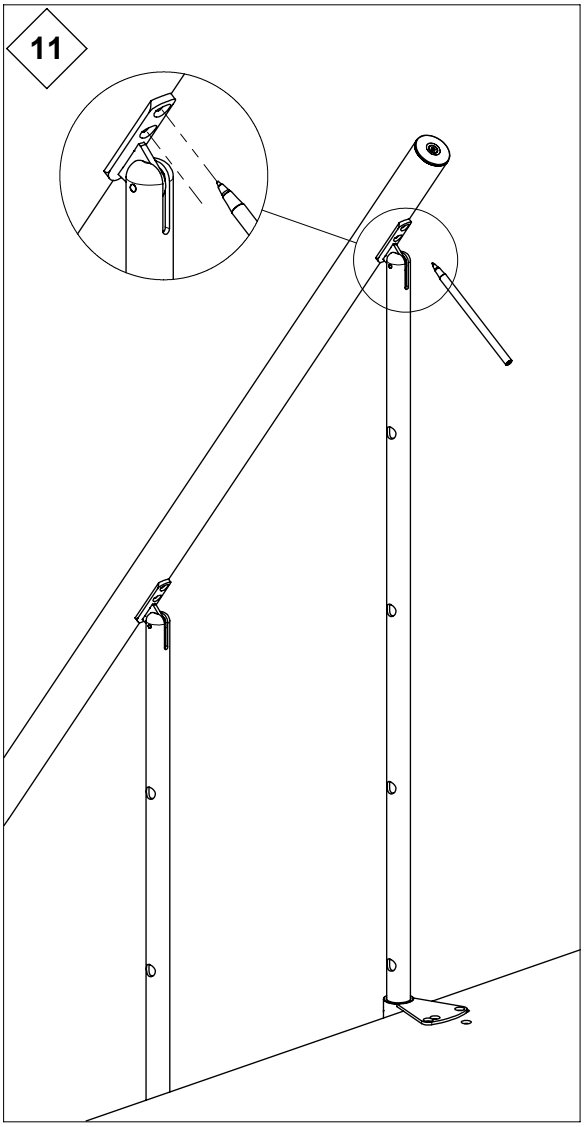
11

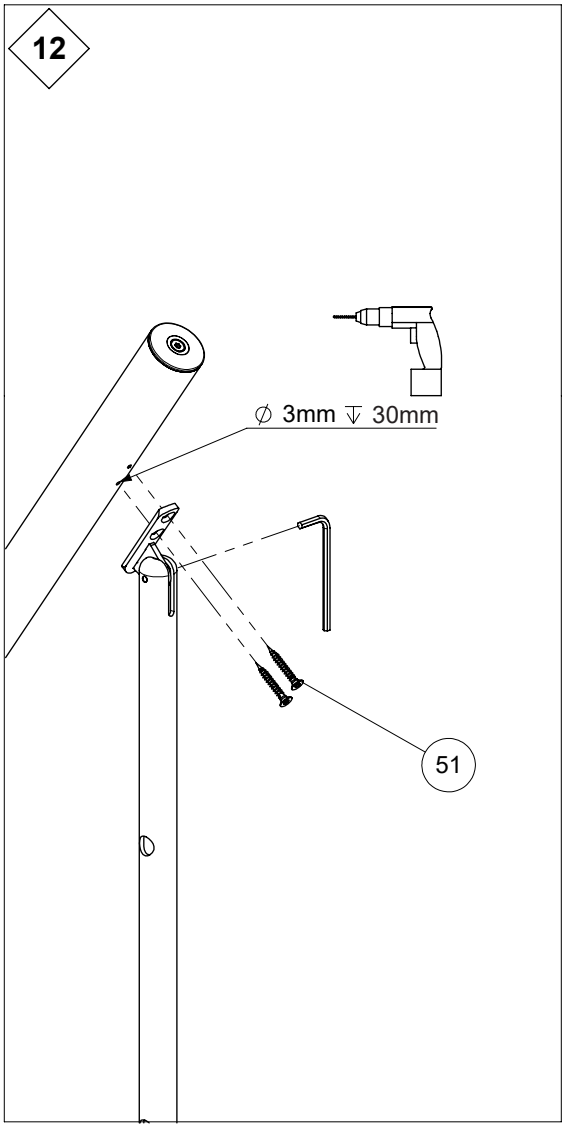
12
∅ 3mm ↧ 30mm
51

13

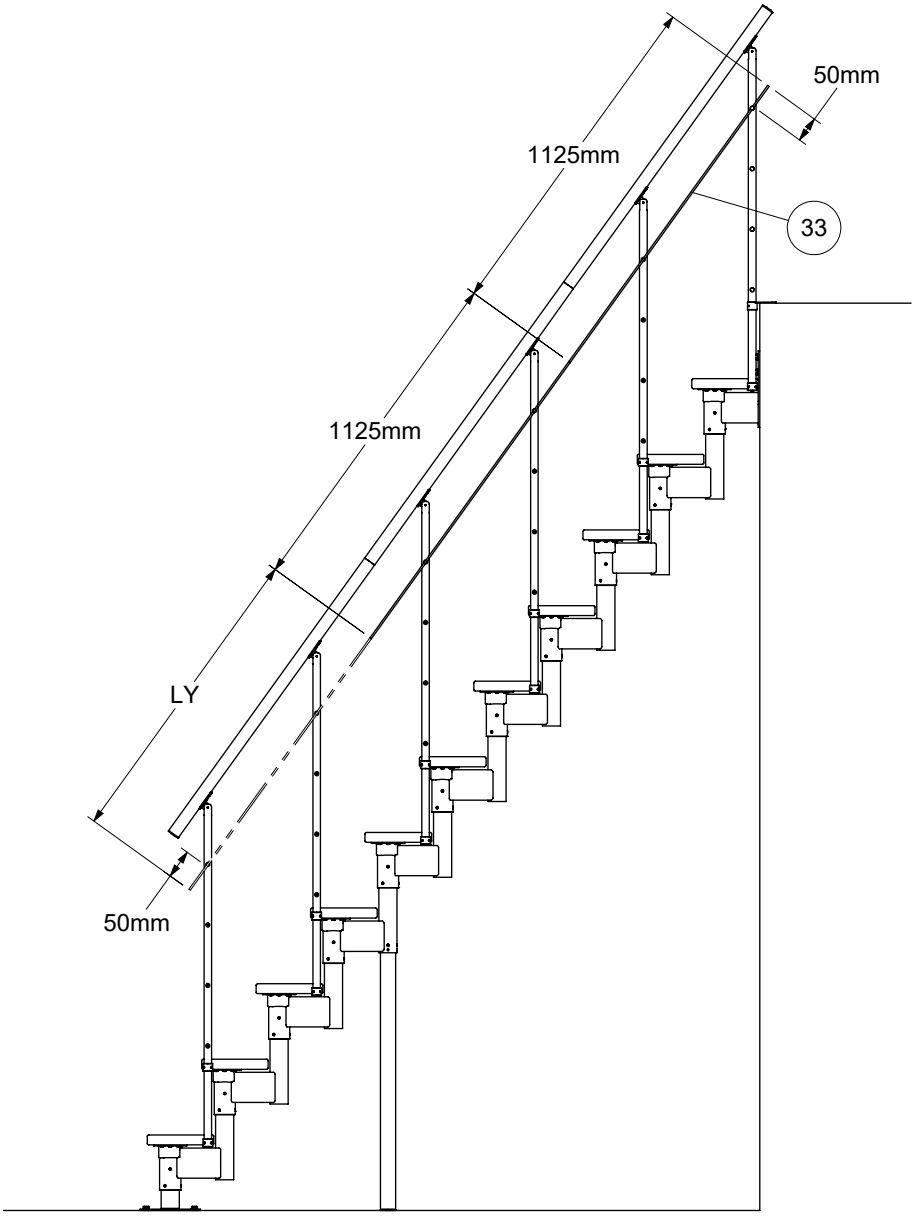

14

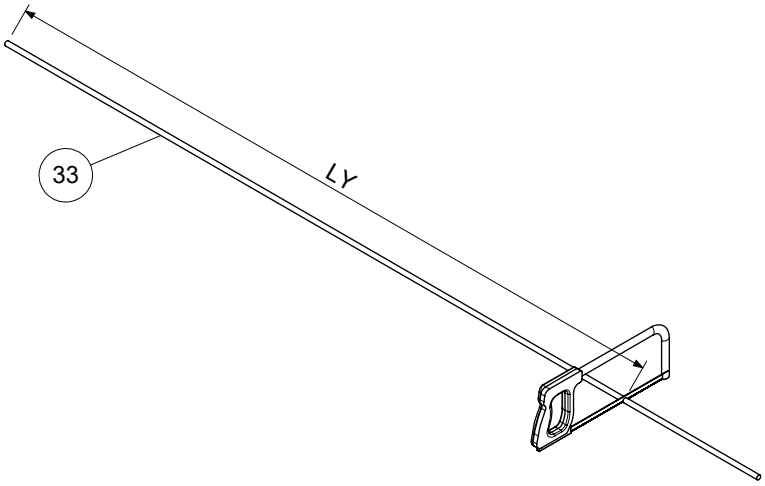

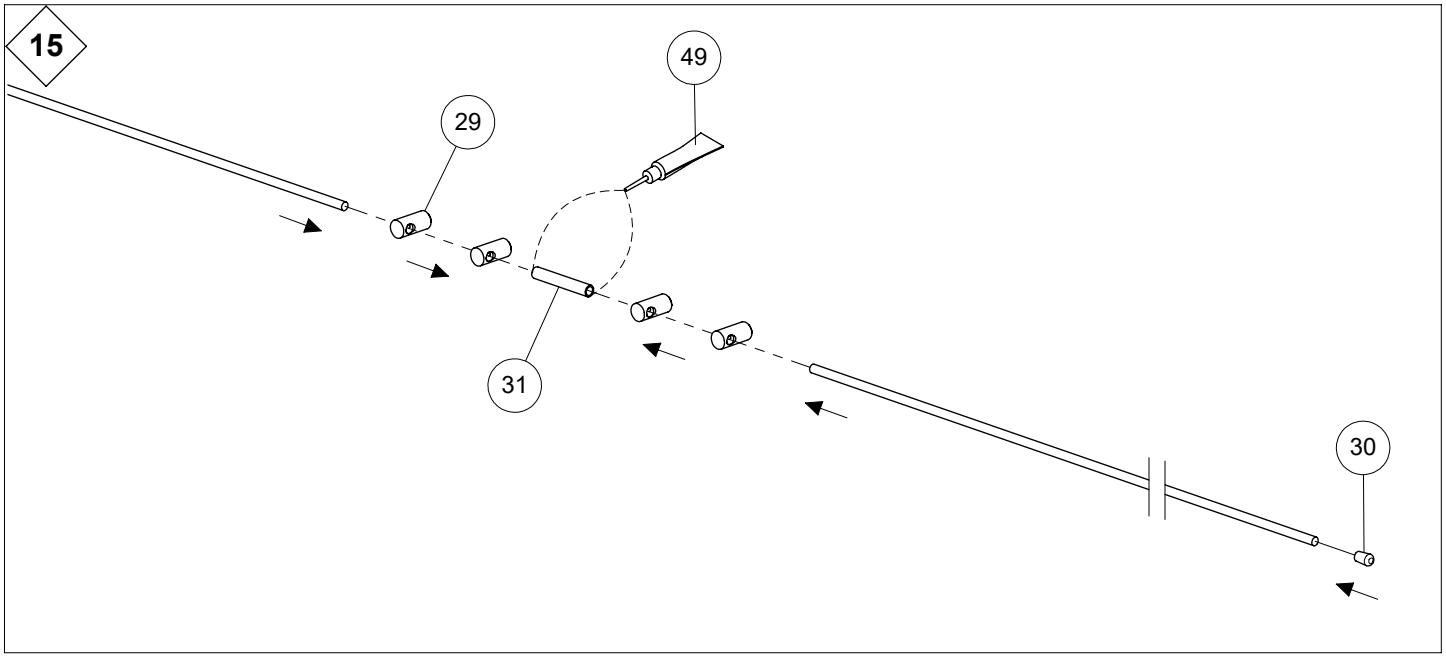
15
49
29
31
30

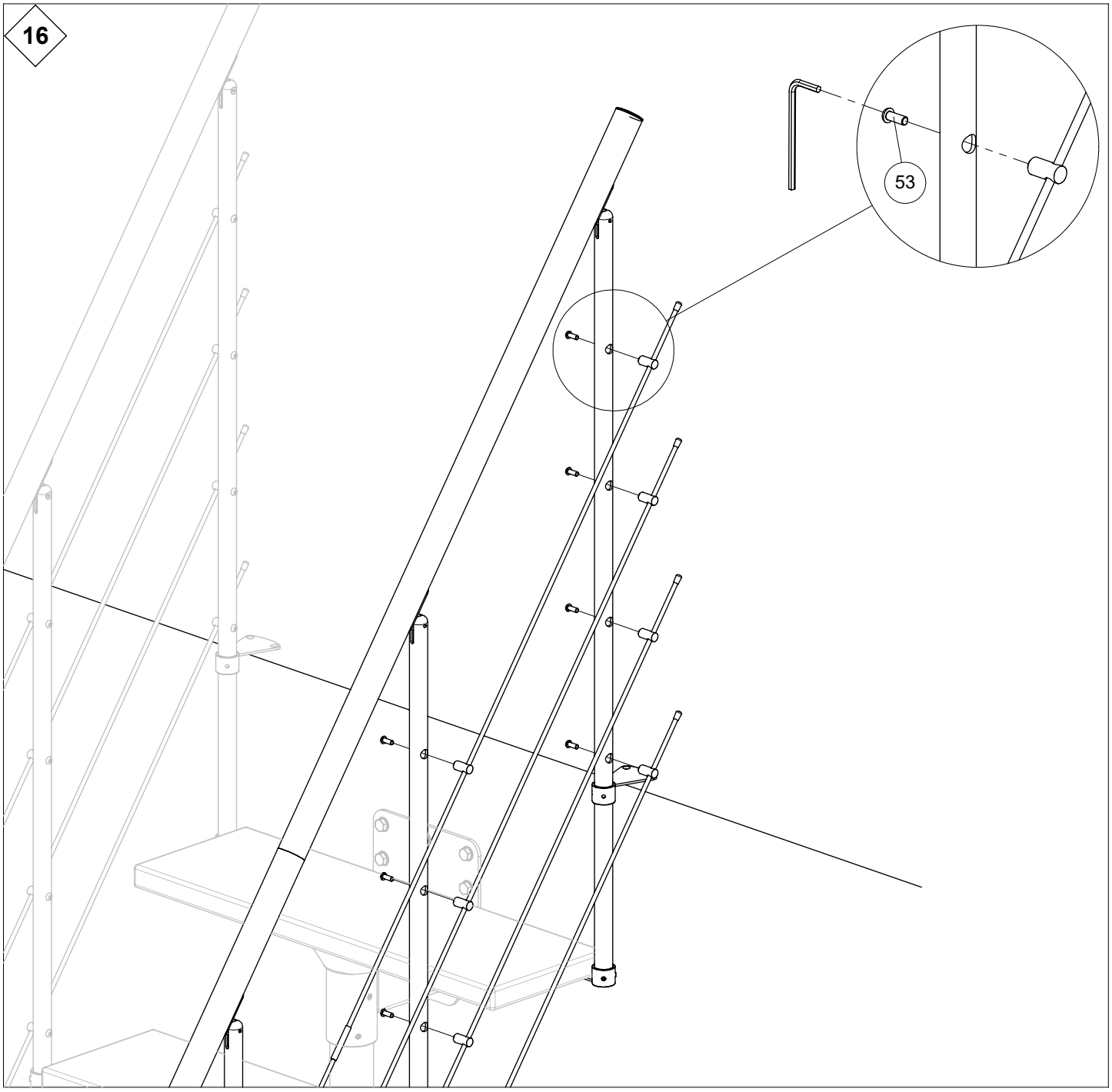
16
53