DANISH TECHNOLOGICAL INSTITUTE

Teknologiparken
Kongsvang Allé 29
DK-8000 Aarhus C
Tel. +45 72 20 20 00
Fax +45 72 20 10 19
info@teknologisk.dk
www.teknologisk.dk

TEST Reg.No. 2

Dolle A/S
Vestergade 47
DK-7741 Frøstrup
DENMARK

Order no.	0308/757378b_uk
Page	1 of 3
Appendices	2
Initials	LTN/BTL

Test Report

Test specimen: Insulated loft hatch, **Model CF76 Thermo with extension casing and top lid**, further details can be found on page 2.

Sampling: The test specimen was forwarded by the client and received at the Danish Technological Institute 2017-09-28. The specimen was marked "757378b" by the laboratory.

Method:

EN ISO 8990:1997	Thermal insulation – Determination of steady-state thermal transmission properties – Calibrated and guarded hot box.
EN ISO 12567-1:2010 + EN ISO 12567-1:2011/AC:	Thermal performance of windows and doors – Determination of thermal transmittance by hot box method – Part 1: Complete windows and doors.

Period: The testing was carried out from 2017-11-13 to 2017-11-17.

Result:

U-value (U_{sp}): **0,15 W/m²·K** (vertical loft hatch)
Uncertainty: ±10% ~ ±0,03 W/m²·K
Detailed testing results are shown in Appendix 1 and 2.

Terms: The test has been performed according to the enclosed conditions, which are according to the guidelines laid down by DANAK (The Danish Accreditation Scheme). The testing is only valid for the tested specimen. The test report may only be extracted if the laboratory has approved the extract.

2017-12-20, Danish Technological Institute, Glass and windows

Lars Thomsen Nielsen
M.Sc., Engineering

Telephone: +45 7220 1116
E-mail: ltn@teknologisk.dk

Bent Lund Nielsen
M.Sc., Engineering

Telephone: +45 7220 1147
E-mail: btl@teknologisk.dk

DANISH TECHNOLOGICAL INSTITUTE

Construction and assembly of test specimen

The Hot-box measurement is performed on a test field consisting of a test specimen with corresponding boundary area adapted to the total area of the test field. The measured value is therefore a total value for both areas (test specimen and boundary area).

When the test specimen is smaller than the test field itself, the area between the test specimen and the test field (boundary area) is insulated with EPS.

Test field = Test specimen + boundary area

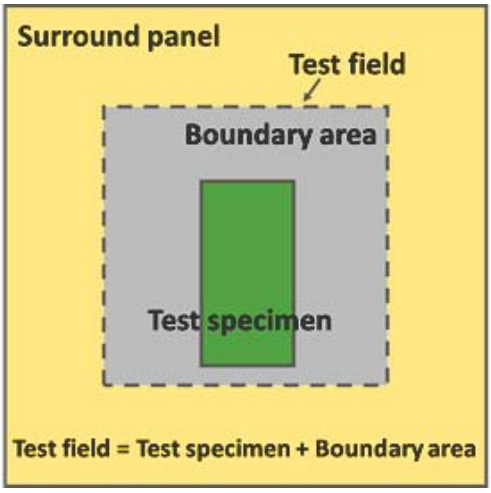

Placement of test specimen

In all the following places the joints are covered with tape:

- Between test specimen and and insulation in the boundary area
- Between the insulation in the boundary area the surround panel
- Joints in the insulation in the boundary area

Comments to the construction
There have been cut 70 mm of the wooden case, so that the total depth is 590 mm instead of the original 660 mm.

Dimensions of test specimen

The dimensions of the test aperture, the test specimen and the edge insulation was measured by the laboratory and appear from the table below.

	Bredde [mm]	Højde [mm]	Tykkelse [mm]	Areal [m²]
Test field	2150	2120	590	4,558
Test specimen	700	1400	590	0,980
Boundary area	-	-	590	3,578

DANISH TECHNOLOGICAL INSTITUTE

Description of the test specimen

The test specimen consists of a loft hatch inserted in a wooden frame, see drawings in Appendix 2.

Pictures of the test specimen and installation

The test specimen was mounted vertical in the test aperture so that the warm side surface was level with the test specimen surface, see pictures below.

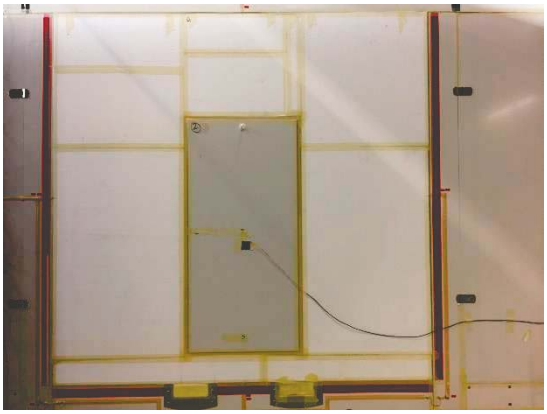

Test specimen seen from the warm side

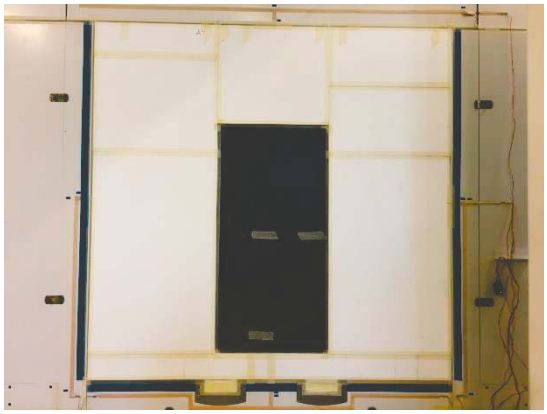

Test specimen seen from the cold side

Results

The determination of the U-value of the combined construction, which consists of the test specimen and the boundary insulation, is conducted according to EN ISO 8990 and EN ISO 12567-1 is shown as the parameter U_{st} the first part of appendix 1.

The above-mentioned U-value is valid for the combined construction only. The U-value for the test specimen is calculated in the last part of appendix 1 and the result of this calculation is called U_{sp}.

DANISH TECHNOLOGICAL INSTITUTE

Important note for measurement results

The numbers below apply to a test specimen mounted in a test field. The test specimen is a combined area for test specimen and boundary insulation. It requires a separate calculation to determine the U-value of the test topic alone, which is not included in table belowt.

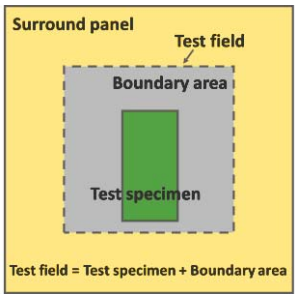

Hotbox test: CF76 Thermo with extension casing and top lid

Start	13-11-2017 15:11
End	17-11-2017 09:11

Specimen

Area of specimen	Asp	m²	4,558

Calibration data

Thermal resistance of surround panel, regression coefficient, $R_{sur} = a \cdot \theta_{me,sur} + b$	m²·K/W	-0,1814 · θme,sur + 6,9215
Total surface thermal resistance, regression coefficient, $R_{s,t} = b \cdot q_{cal}^{a}$	m²·K/W	0,2143 · qsp exp(-0,0796)
Convective fraction, warm side, regression coefficient, $F_{c,i} = a \cdot q_{cal} + b$	-	0,0037 · qsp + 0,4655
Convective fraction, cold side, regression coefficient, $F_{c,e} = a \cdot q_{cal} + b$	-	0,0001 · qsp + 0,7222

Results

Air temperature, warm side	θci	°C	20,25
Air temperature, cold side	θce	°C	-0,22
Baffle temperature, warm side	θsi,b	°C	20,11
Baffle temperature, cold side	θse,b	°C	-0,15
Surround panel temperature, warm side	θsi,sur	°C	20,04
Surround panel temperature, cold side	θse,sur	°C	-0,07
Reveal temperature, warm side	θsi,p	°C	19,98
Reveal temperature, cold side	θse,p	°C	-0,09
Air flow warm side	vi	m/s	1,12
Air flow cold side	ve	m/s	1,30
Input power	θin	W	13,561
Air temperature difference	Δθc	K	20,47
Surround panel temperature difference	Δθs,sur	K	20,11
Mean temperature of surround panel	θme,sur	°C	9,99
Thermal resistance of surround panel	Rsur	m²·K/W	5,111
Thermal conductivity of surround panel	λsur	W/(m·K)	0,115
Linear thermal transmittance of edge between specimen and surround panel	Ψedge	W/(m·K)	0,000
Heat flow through surround panel	Φsur	W	6,658
Heat flow through edge zone	Φedge	W	0,000
Heat flow density of specimen	qsp	W/m²	1,51
Convective fraction, warm side	Fc,i	-	0,471
Convective fraction, cold side	Fc,e	-	0,722
Total surface thermal resistance	Rs,t	m²·K/W	0,207
Environmental temperature, warm side	θn,i	°C	20,18
Environmental temperature, cold side	θn,e	°C	-0,20
Environmental temperature difference	Δθn	K	20,38
Overall thermal transmittance	Ust	W/(m²·K)	0,07

DANISH TECHNOLOGICAL INSTITUTE

Test specimen: CF76 Thermo with extension casing and top lid

To determine the U-value of the test specimen, then heat loss through the overall design must first be determined. Hereafter the heat loss through edge insulation and line loss can be deducted.

The heat loss through the overall construction is calculated as follows: $\Phi_{total} = U_{total} \cdot A_{total} \cdot \Delta T$

The U-value of the overall construction (Appendix 1)	U_{total}	=	0,075 W/m²·K
The area of the overall construction	A_{total}	=	4,558 m²
Temperature difference between cold and hot side	ΔT	=	20,38 K
The heat loss through the overall construction	Φ_{total}	=	6,97 W

The U-value of the edge insulation is calculated from this formula: $U_{ins} = \frac{1}{R_i + R_e + \frac{s}{\lambda}}$

Internal surface resistance	R_i	=	0,04 m²·K/W
External surface resistance	R_e	=	0,13 m²·K/W
Thickness of the boundary insulation	s	=	0,590 m
Heat conductivity of the boundary insulation	λ	=	0,0321 W/m·K
The U-value of the boundary insulation	U_{ins}	=	0,054 W/m²·K

The heat loss through the boundary insulation is calculated from this formula: $\Phi_{ins} = U_{ins} \cdot A_{ins} \cdot \Delta T$

The area of the boundary insulation	A_{ins}	=	3,578 m²
The heat loss through the boundary insulation	Φ_{ins}	=	3,93 W

Heat loss due to line loss: $\Phi_{edge} = \Psi_{edge} \cdot l_{edge,ins} \cdot \Delta T$

Linear transmission coefficient for construction	$\Psi_{edge,ins}$	=	0,0000 W/m·K
Length of line loss	$l_{edge,ins}$	=	4,200 m
Line loss along edge of test piece and edge insulation	Φ_{edge}	=	0,00 W

The heat loss through the test specimen: $\Phi_{sp} = \Phi_{total} - \Phi_{ins} - \Phi_{edge}$

The heat loss through the test specimen:	Φ_{sp}	=	3,04 W

The U-value of the test specimen is determined by the formula: $U_{sp} = \frac{\Phi_{sp}}{A_{sp} \cdot \Delta T}$

The area of the test specimen	A_{sp}	=	0,980 m²
The U-value of the test topic	$\mathbf{U_{sp}}$	=	**0,15 W/m²·K**

DANISH TECHNOLOGICAL INSTITUTE

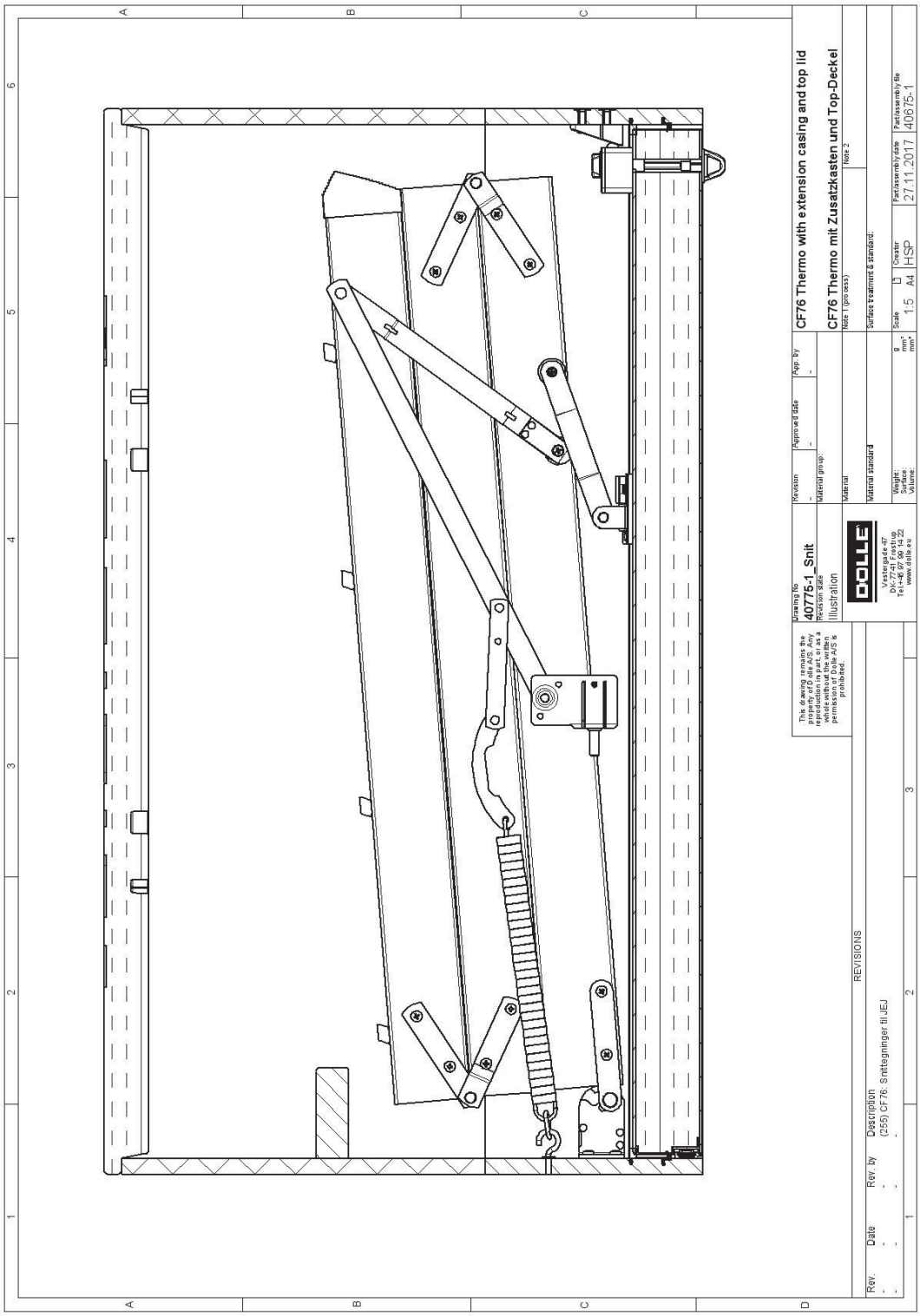

Section of CF76 Thermo with extension casing and top lid – The ladder was not mounted during the measurement.

The general conditions pertaining to assignments accepted by Danish Technological Institute shall apply in full to the technical testing and calibration at Danish Technological Institute and to the completion of test reports and calibration certificates within the relevant field.

DANAK

The Danish Accreditation and Metrology Fund - DANAK - is managing the Danish accreditation scheme based on a contract with the Danish Safety Technology Authority under the Danish Ministry of Economics and Business Affairs who is responsible for the legislation on accreditation in Denmark.

The fundamental criteria for accreditation are described in DS/EN ISO/IEC 17025: "General requirements for the competence of testing and calibration laboratories". DANAK uses guidance documents to clarify the requirements in the standards, where this is considered to be necessary. These will mainly be drawn up by the "European co-operation for Accreditation (EA)" or the "International Laboratory Accreditation Co-operation (ILAC)" with a view to obtaining uniform criteria for accreditation worldwide. In addition, the Danish Safety Technology Authority issues Technical Regulations prepared by DANAK with specific requirements for accreditation that are not contained in the standards.

In order for a laboratory to be accredited it is, among other things, required:

- that the laboratory and its personnel are free from any commercial, financial or other pressures, which might influence their impartiality;

- that the laboratory operates a documented management system, and has a management that ensures that the system is followed and maintained;

- that the laboratory has at its disposal all items of equipment, facilities and premises required for correct performance of the service that it is accredited to perform;

- that the laboratory has at its disposal personnel with technical competence and practical experience in performing the services that they are accredited to perform;

- that the laboratory has procedures for traceability and uncertainty calculations;

- that accredited testing are performed in accordance with fully validated and documented methods;

- that accredited services are performed and reported in confidentiality with the customer and in compliance with the customer's request;

- that the laboratory keeps records which contain sufficient information to permit repetition of the accredited test;

- that the laboratory is subject to surveillance by DANAK on a regular basis;

- that the laboratory shall take out an insurance, which covers liability in connection with the performance of accredited services.

Reports carrying DANAK's accreditation mark are used when reporting accredited services and show that these have been performed in accordance with the rules for accreditation.